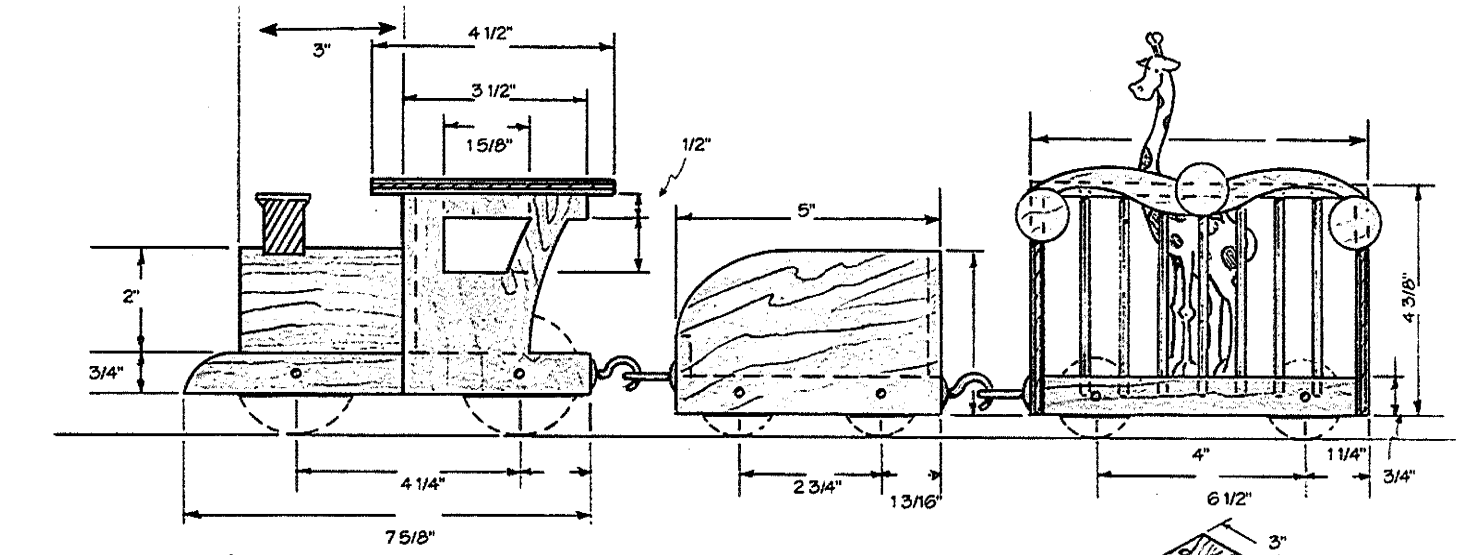
3"
4 1/2"
3 1/2"
1 5/8"
1/2"
5"
2"
3/4"
4 3/8"
4 1/4"
7 5/8"
2 3/4"
1 3/16"
4"
1 1/4"
3/4"
6 1/2"

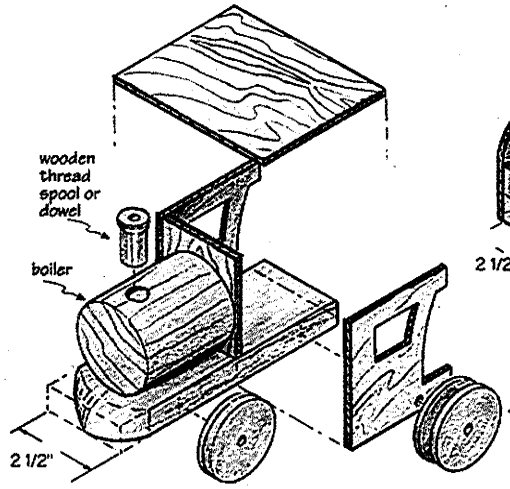
wooden thread spool or dowel
boiler
2 1/2"
1/4 x 2 1/4"

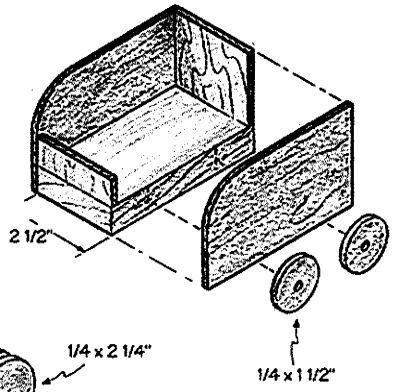
2 1/2"
1/4 x 1 1/2"

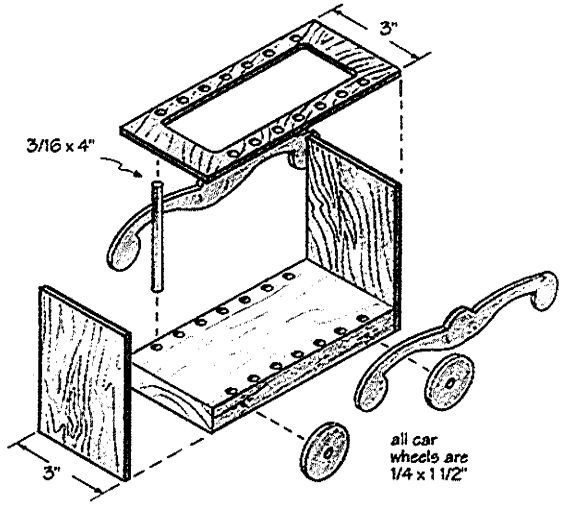
3"
3/16 x 4"
3"
all car wheels are 1/4 x 1 1/2"

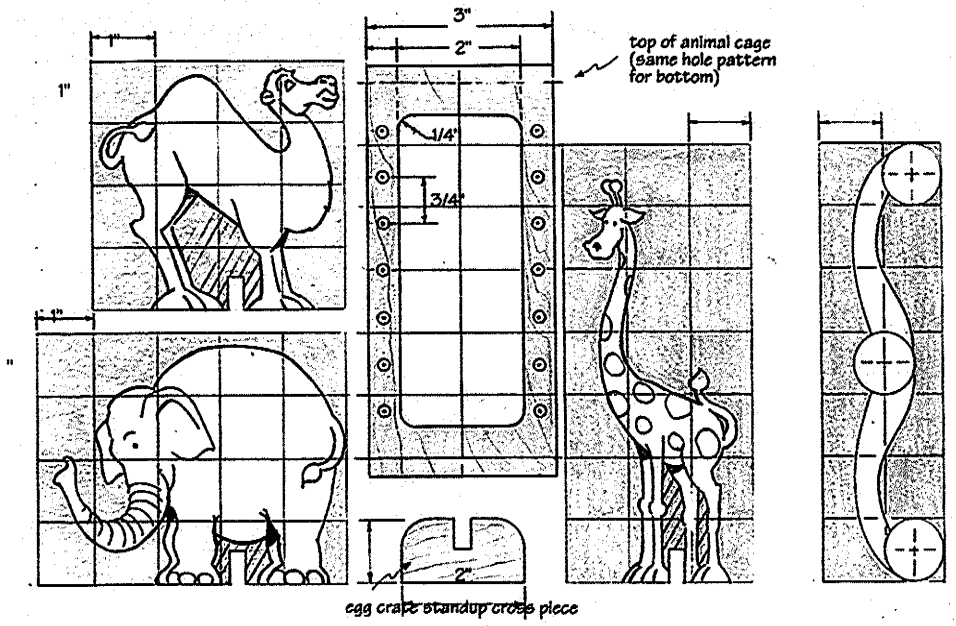
1"
1"
1"
3"
2"
top of animal cage
(same hole pattern
for bottom)
1/4"
3/4"
2"
egg crate standup cross piece